Ventable, pilot operated, balanced poppet relief valve

Capacity:
50 gpm (200 L/min.)

Model:
RVGS

Product Description

Ventable, pilot-operated, balanced-poppet relief cartridges are normally closed pressure regulating valves. When the pressure at the inlet (port 1) reaches the valve setting, the valve starts to open to tank (port 2), throttling flow to regulate the pressure. They provide a vent port (port 3) that connects between the main piston and pilot stage to provide for remote control by other pilot or 2-way valves. These valves are accurate, have low pressure rise vs. flow, they are smooth and quiet, and are moderately fast.

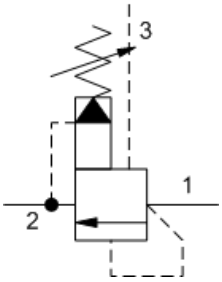

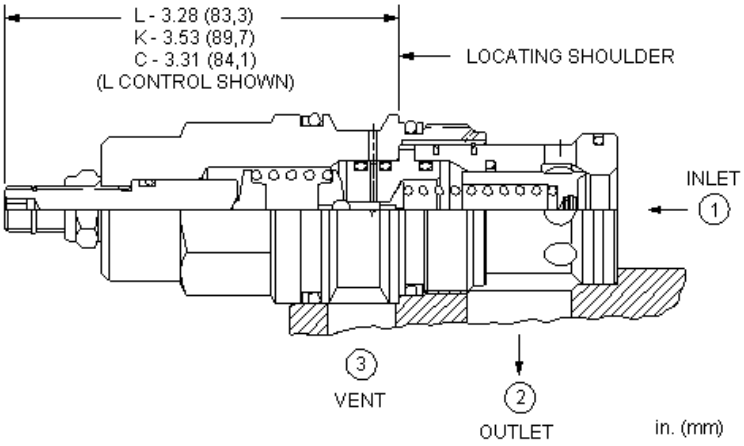

Technical Features

- Because the modulating occurs inside the cartridge, these valves are immune to most of the problems associated with cavitation, namely noise and manifold erosion.
- Suitable for use in load holding applications, providing that any valving on the vent port (port 3) is zero leak.
- Will accept maximum pressure at port 2; suitable for use in cross port relief circuits.
- A remote pilot relief on port 3 (vent) will control the valve below its own setting.
- Valve is relatively insensitive to varying oil temperatures and oil borne contamination.
- Main stage orifice is protected by a 150 micron stainless steel screen.
- Back pressure on the tank port (port 2) is directly additive to the valve setting at a 1:1 ratio.
- Incorporates the Sun floating style construction to minimize the possibility of internal parts binding due to excessive installation torque and/or cavity/cartridge machining variations.

Technical Data

	U.S. Units	Metric Units
Cavity	T-17A	
Capacity	50 gpm	200 L/min.
Control Pilot Flow	15 - 20 in³/min.	0,25 - 0,33 L/min.
Factory Pressure Settings Established at	4 gpm	15 L/min.
Maximum Operating Pressure	5000 psi	350 bar
Maximum Valve Leakage at Reseat	10 drops/min.	0,7 cc/min.
Response Time - Typical	2 ms	

Series (from Cavity)	Series 3	
Adjustment - Number of Clockwise Turns to Increase Setting	5	
Valve Hex Size	1 1/4 in.	31,8 mm
Valve Installation Torque	150 - 160 lbf ft	200 - 215 Nm
Adjustment Screw Internal Hex Size	5/32 in.	4 mm
Adjustment Locknut/Cap Hex Size	9/16 in.	15 mm
Adjustment Nut Torque	80 - 90 lbf in.	9 - 10 Nm
Seal Kits - Cartridge	Buna: 990-217-007	
Seal Kits - Cartridge	Viton: 990-217-006	
Model Weight	1.39 lb.	0.63 kg.

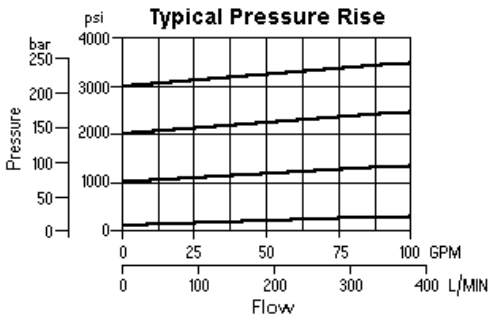

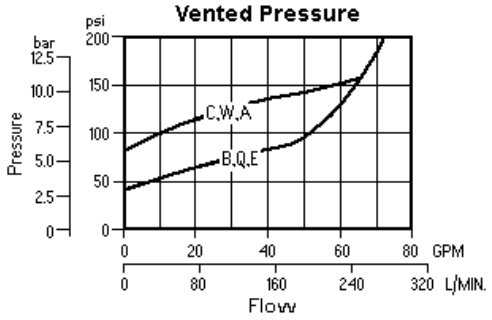

RVGS-LAN

Control

Standard Options

- C* Tamper Resistant - Factory Set
- K Handknob
- L Standard Screw Adjustment

Adjustment Range

Standard Options

- A 100 - 3000 psi (7 - 210 bar), 1000 psi (70 bar) Standard Setting
- B 50 - 1500 psi (3,5 - 105 bar), 1000 psi (70 bar) Standard Setting
- C 150 - 6000 psi (10,5 - 420 bar), 1000 psi (70 bar) Standard Setting
- N 60 - 800 psi (4 - 55 bar), 400 psi (28 bar) Standard Setting
- Q 60 - 400 psi (4 - 28 bar), 200 psi (14 bar) Standard Setting
- W 150 - 4500 psi (10,5 - 315 bar), 1000 psi (70 bar) Standard Setting

Seal Material

Standard Options

- N Buna-N
- V Viton

Material/Coating Modifier

Preferred Options

No modifier (standard material with no special coating)

Special Options

/AP Stainless Steel, Passivated

Control:C

Control:L

Our stainless product line is growing! If you are interested in a stainless option for this model which is not shown please contact Sun.

When the modifier is /AP, the control must be C or L

* Special Setting required, specify at time of order
Customer specified setting stamped on hex.

Copyright © 2009-2010 Sun Hydraulics Corporation. All rights reserved.
Terms and Conditions - ISO Certification - Statement of Privacy